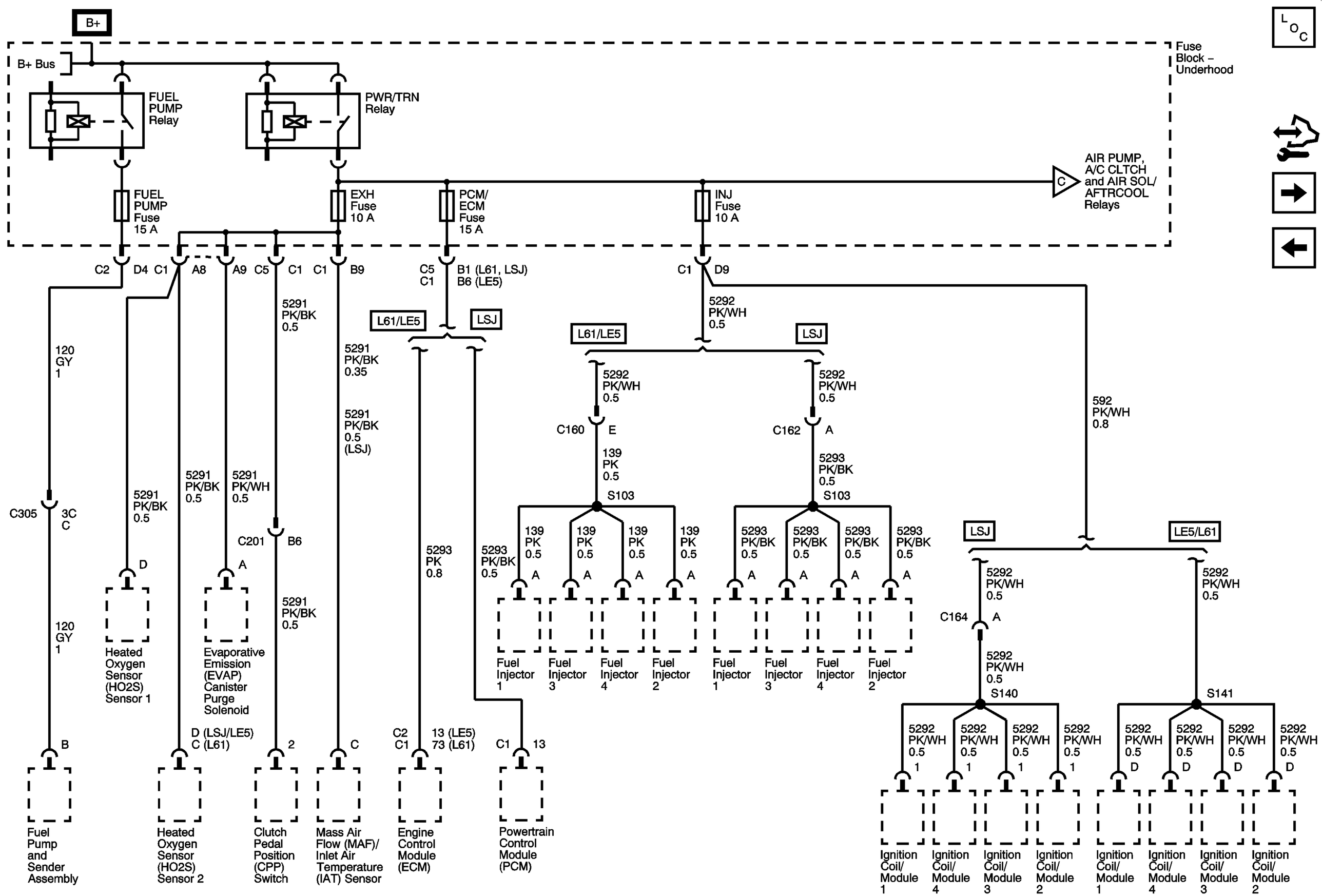
B+
B+ Bus
FUEL PUMP Relay
PWR/TRN Relay
Fuse Block – Underhood
FUEL PUMP Fuse 15 A
EXH Fuse 10 A
PCM/ ECM Fuse 15 A
INJ Fuse 10 A
AIR PUMP, A/C CLTCH and AIR SOL/ AFTRCOOL Relays
C2
D4 C1
A8
A9 C5
C1 C1
B9
C5 C1
B1 (L61, LSJ) B6 (LE5)
C1 D9
5291 PK/BK 0.5
5291 PK/BK 0.35
5291 PK/BK 0.5 (LSJ)
L61/LE5
LSJ
5292 PK/WH 0.5
592 PK/WH 0.8
120 GY 1
C305 3C C
5291 PK/BK 0.5
5291 PK/BK 0.5
5291 PK/WH 0.5
C201 B6
5293 PK 0.8
5292 PK/WH 0.5
C160 E
C162 A
139 PK 0.5
5293 PK/BK 0.5
S103
5293 PK/BK 0.5
139 PK 0.5
5293 PK/BK 0.5
LE5/L61
C164 A
S140
S141
D
A
B
D (LSJ/LE5) C (L61)
2
C
C2 C1
13 (LE5) 73 (L61)
C1 13
Heated Oxygen Sensor (HO2S) Sensor 1
Evaporative Emission (EVAP) Canister Purge Solenoid
Fuel Injector 1
Fuel Injector 3
Fuel Injector 4
Fuel Injector 2
Fuel Pump and Sender Assembly
Heated Oxygen Sensor (HO2S) Sensor 2
Clutch Pedal Position (CPP) Switch
Mass Air Flow (MAF)/ Inlet Air Temperature (IAT) Sensor
Engine Control Module (ECM)
Powertrain Control Module (PCM)
Ignition Coil/ Module 1
Ignition Coil/ Module 4
Ignition Coil/ Module 3
Ignition Coil/ Module 2